Engineering Release Date/Time	Location	Change description / Change number	P/A 0 1 2
			RELEASED

- (A) WATER FILLER CAP, FRESH WATER
- (B) OIL FILLER CAP, ENGINE
- (C) OIL DIP STICK, ENGINE LEFT OR RIGHT SIDE MOUNTED
- (D) ECU CONTROL UNIT
- (E) OIL DRAIN (WITH PIPE), ENGINE Φ12.5
- (F) OIL FILTER MAIN
- (G) OIL FILTER BYPASS
- (H) LIFTING EYE
- (I) WATER DRAIN, FRESH WATER
- (J) WATER DRAIN, SEA WATER
- (K) AIR FILTER
- (L) FUEL FILTER
- (M) HOT WATER OUTLET Φ16
- (N) HOT WATER INLET Φ16
- (P) STRAINER SEA WATER
- (Q) OIL DIP STICK DRIVE (UNDER COVER)
- (R) CENTRE OF GRAVITY
- (S) WATER INLET DRIVE
- (T) OIL DRAIN DRIVE (BEHIND ADAPTER)
- (U) FUEL INLET CONNECTION Φ10
- (V) FUEL RETURN TO TANK Φ10
- (X) ENGINE STOP
- (Y) CRANK CASE VENTILATION
- (Z) EXHAUST RISER Φ102 (4"XOPTION)
- AA X-MESUREMENT SEE 7742299-6
- (AB) TIE BAR (TWIN INSTALLATION)
- (AC) EXTRA ALTERNATOR (OPTION)
- (AD) SEA WATER PUMP

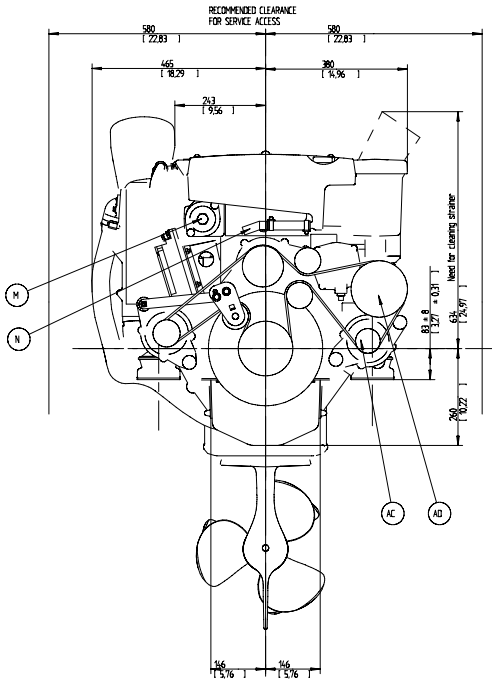

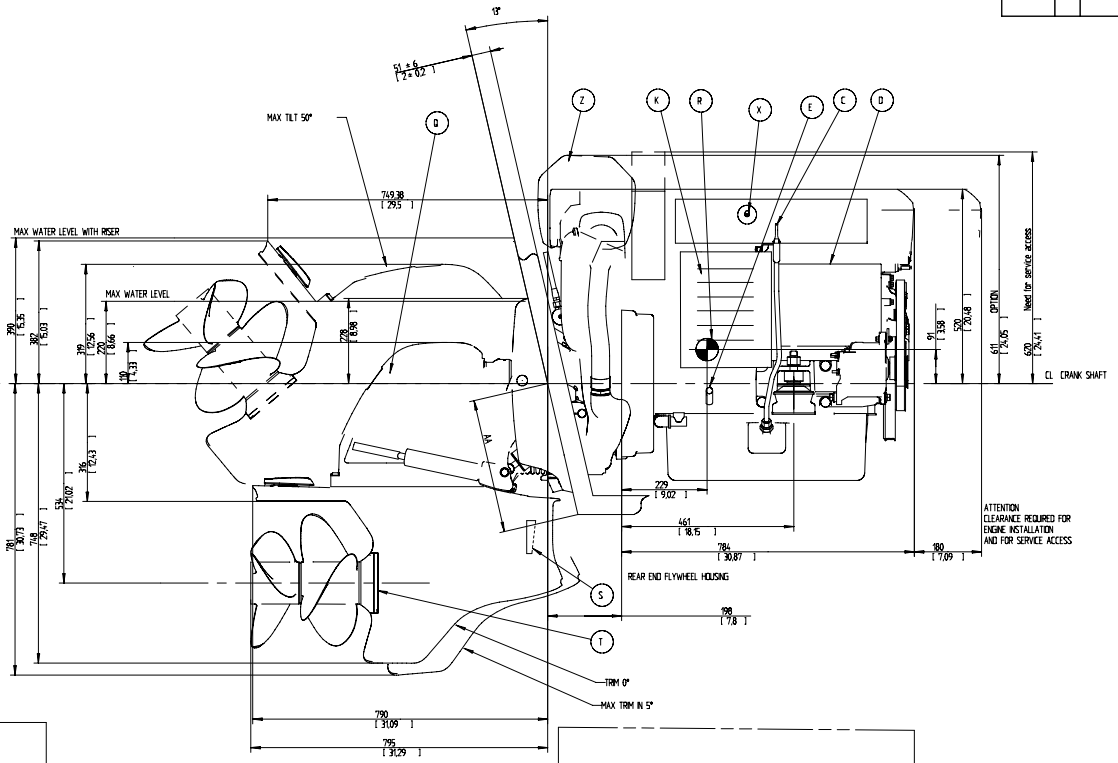

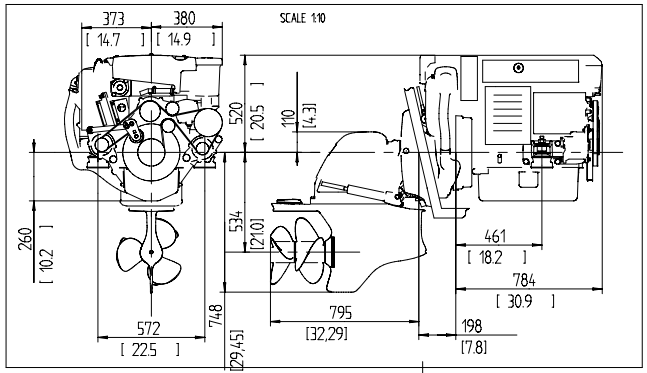

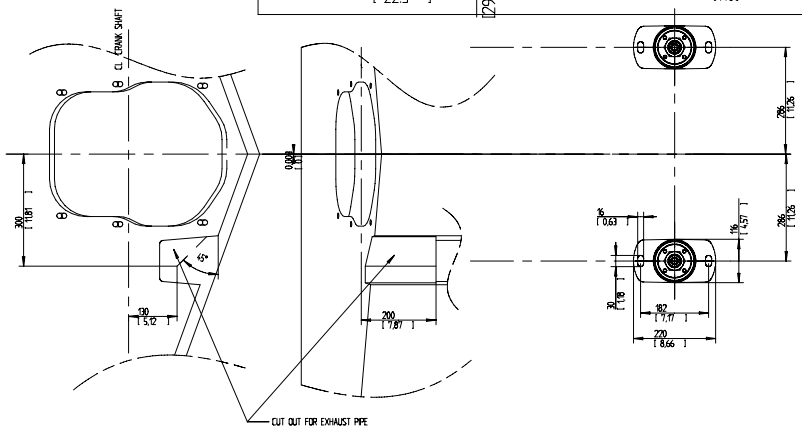

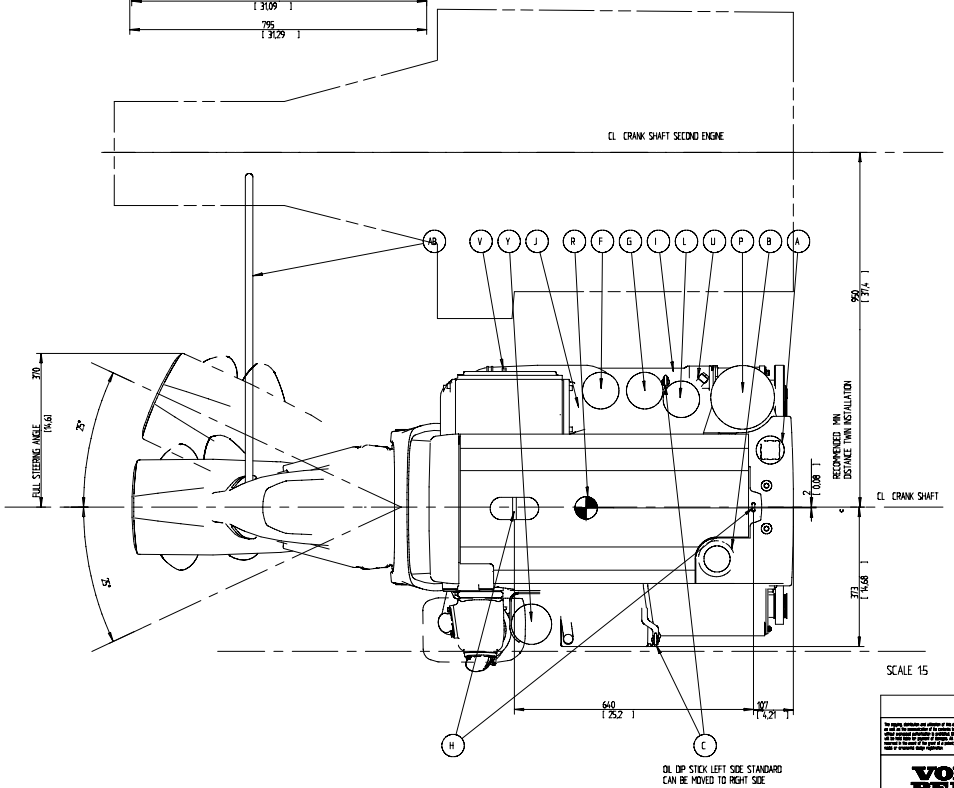

SCALE 15

SYMBOLS, DESIGNATIONS AND GENERAL DRAWING METHODS STD 99-0003	
DRAW STD 1002160	
Drawn for: ENGINE D4 / AQ-DRIVE DP-R	
Drawing title: DIMENSION DRAWING	
Drawing no: 3591863	Sheet title: 01

The copyright, distribution and utilization of this document as well as the communication of its contents to others without express authorization is prohibited. Offenders will be held liable for the payment of damages. All rights reserved in the event of the grant of a patent, utility model or ornamental design registration.

VOLVO PENTA