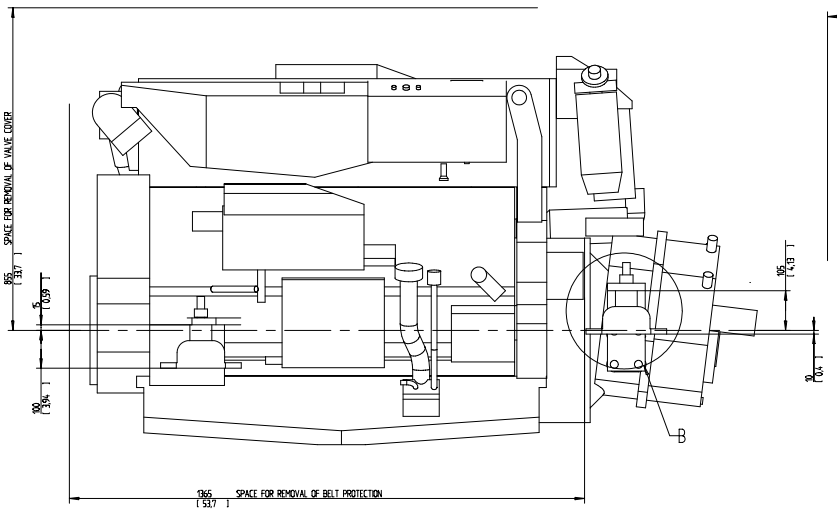

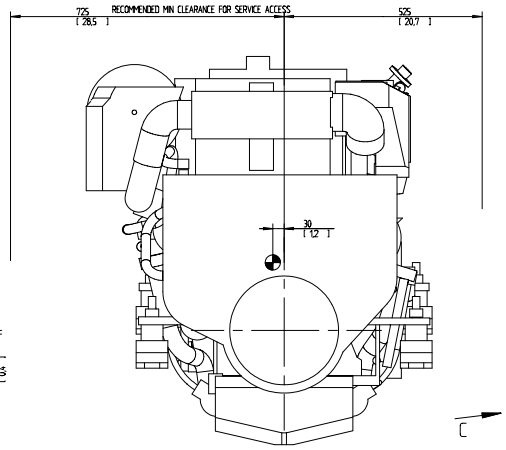

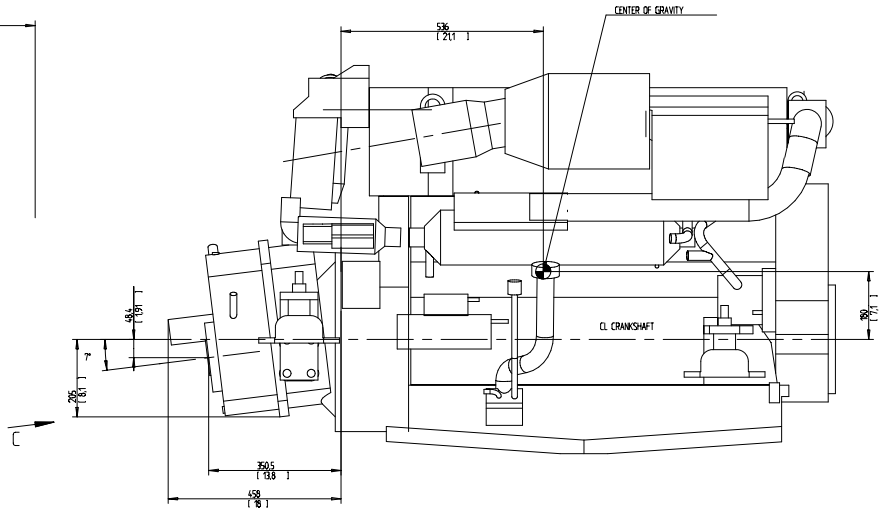

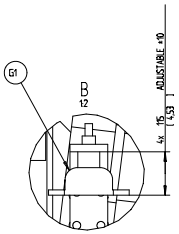

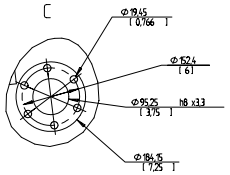

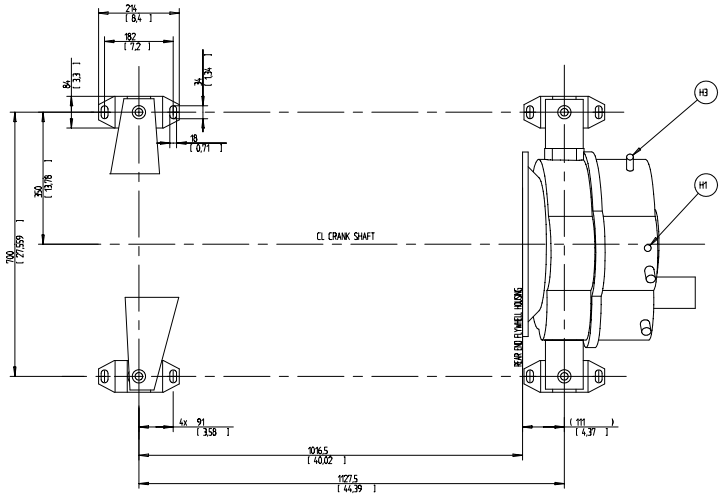

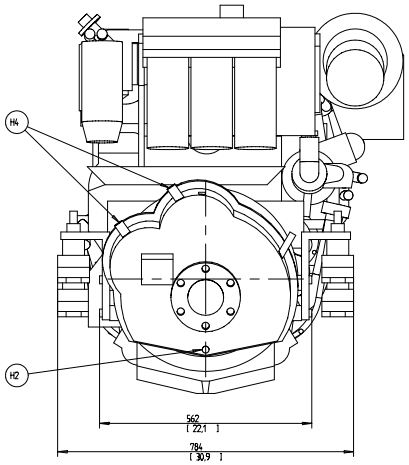

G1	ELASTIC SUSPENSION (4x). (OPTION)
H1	OIL FILLER TRANSMISSION
H2	OIL DRAIN TRANSMISSION
H3	OIL DIPSTICK TRANSMISSION
H4	CONNECTION SHIFT SOLENOIDES

SCALE: 15

THIS DRAWING IS A COMPLEMENT TO 3591237

9 REQUIRED DOCUMENTS

DWG No	ISSUE	CAD DRAW NAME	CAD PART/ASSY NAME	BASE
3591233	02	3591233		
			MODEL NAME	

SYMBOLS, DESIGNATIONS AND GENERAL DRAWING METHODS STD 97-4000 AND STD 1000-2000

Drawing title
ENGINE INSTALLATION
D9 MARINE MG 5075 A

Drawing type
INSTALLATION DRAWING

VOLVO PENTA

Drawing no 3591233 | Issue letter 02 | Sheet no 1(1)

RELEASED