A 46696-00	SEE ECN	D 2 0- MAN	RELEASED	06-09-25

- (A) WATER FILLER CAP, FRESH WATER
- (B) OIL FILLER CAP, ENGINE
- (C) OIL DIPSTICK, ENGINE LEFT OR RIGHT SIDE MOUNTED
- (D) ENGINE CONTROL UNIT
- (E) OIL DRAIN PIPE, ENGINE Φ125
- (F) OIL FILTER MAIN
- (G) OIL FILTER BYPASS
- (H) LIFTING EYE
- (I) WATER DRAIN, FRESH WATER
- (J) WATER DRAIN, SEA WATER
- (K) AIR FILTER
- (L) FUEL FILTER
- (M) HOT WATER OUTLET Φ16
- (N) HOT WATER INLET Φ16
- (O) ELECTRICAL FUSES (ONLY 24V)
- (P) SEA WATER INLET Φ50
- (Q) OIL DIPSTICK REVERSE GEAR
- (R) CENTRE OF GRAVITY
- (T) OIL DRAIN REVERSE GEAR
- (U) FUEL INLET CONNECTION
- (V) FUEL RETURN TO TANK
- (X) ENGINE STOP
- (Y) CRANKCASE VENTILATION
- (Z) EXHAUST RISER Φ127 (5") (OPTION)
- (AA) SEA WATER PUMP
- (AB) EXHAUST ELBOW Φ127 (5")
- (AC) EXTRA ALTERNATOR

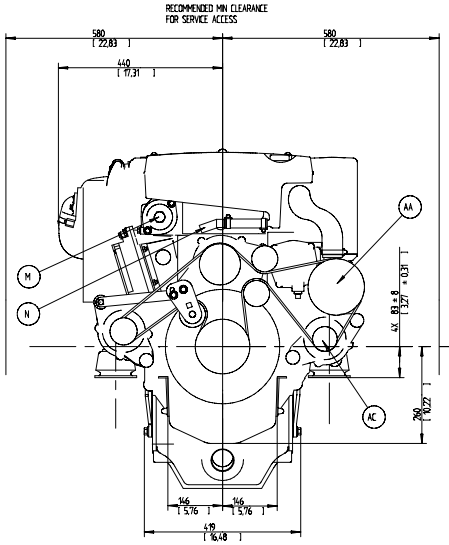

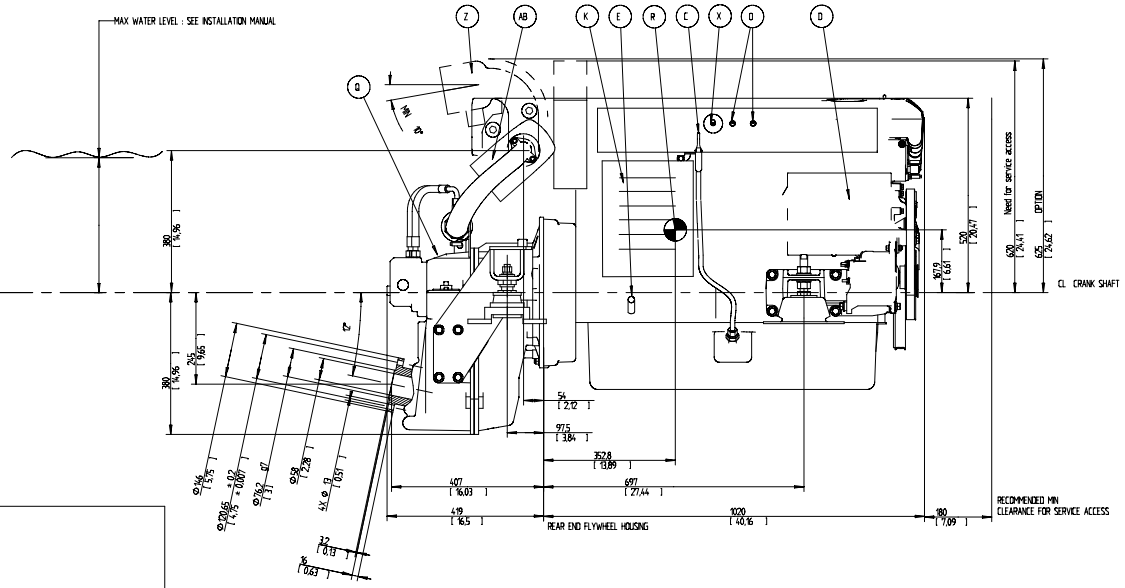

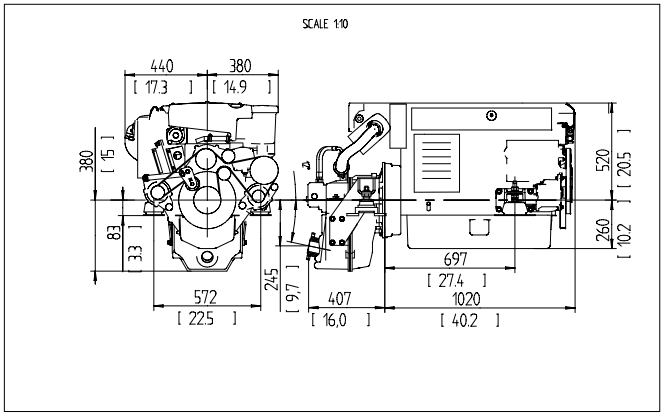

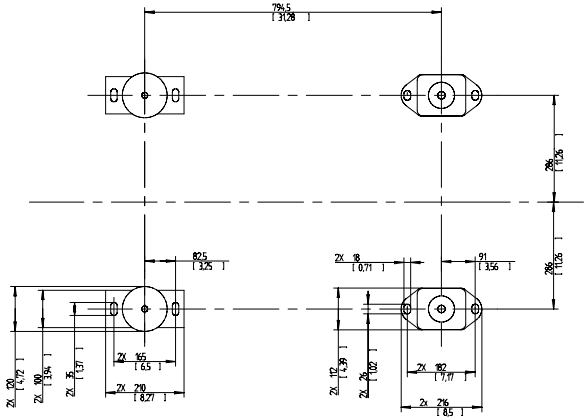

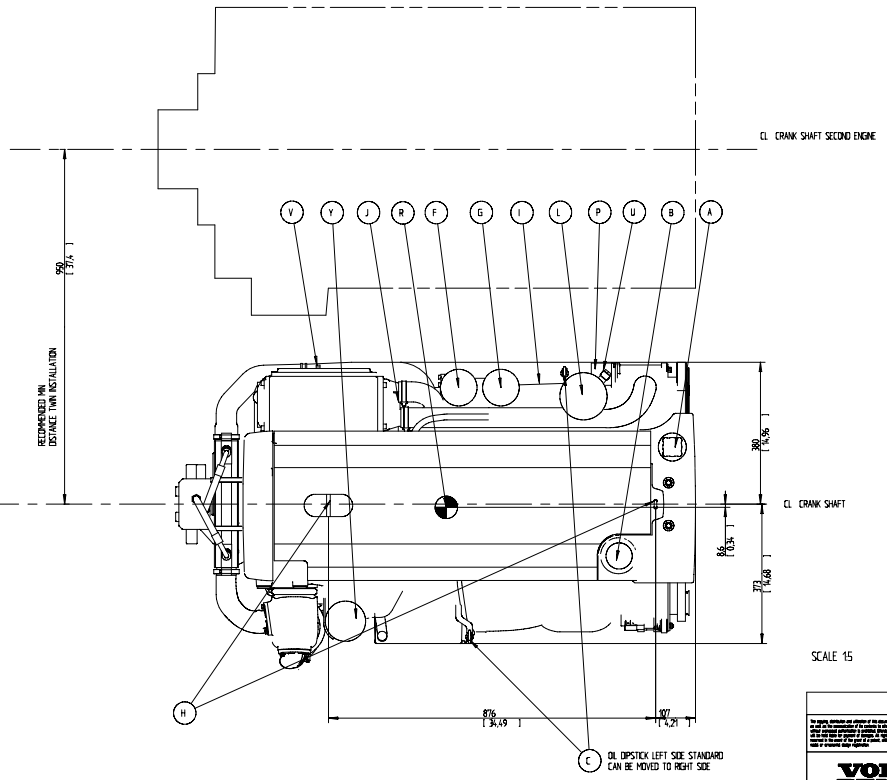

SCALE 1:5

SYMBOLS, DESIGNATIONS AND GENERAL DRAWING METHODS SIS 01-4005 ISO, SIS 10230/31	
Drawing title	ENGINE DIMENSIONS D6 / HS80V
Drawing type	
Owner classification / profile	
Drawing no	3591357
Issue index	02
Sheet no	1(1)

VOLVO PENTA