Reference Number Date Sign	Location	Change description Approved Verified Released	P/A 0 1 2 main	RELEASED
A 46696-00		SEE ECN		Date 06-09-25

(A) WATER FILLER CAP, FRESH WATER
(B) OIL FILLER CAP, ENGINE
(C) OIL DIPSTICK, ENGINE LEFT OR RIGHT SIDE MOUNTED
(D) ENGINE CONTROL UNIT
(E) OIL DRAIN (WITH PUMP), ENGINE Ø12.5
(F) OIL FILTER MAIN
(G) OIL FILTER BYPASS
(H) LIFTING EYE
(I) WATER DRAIN, FRESH WATER
(J) WATER DRAIN, SEA WATER
(K) AIR FILTER
(L) FUEL FILTER
(M) HOT WATER OUTLET
(N) HOT WATER INLET
(P) SEA WATER INLET Ø38
(Q) OIL DIPSTICK REVERSE GEAR
(R) CENTRE OF GRAVITY
(T) OIL FILTER AND OIL SUCTION REVERSE GEAR
(U) FUEL INLET CONNECTION
(V) FUEL RETURN TO TANK
(X) ENGINE STOP
(Y) CRANKCASE VENTILATION
(Z) EXHAUST RISER Ø 102 (4") (OPTION)
(AA) SEA WATER PUMP
(AB) EXHAUST ELBOW Ø102 (4")
(AC) EXTRA ALTERNATOR

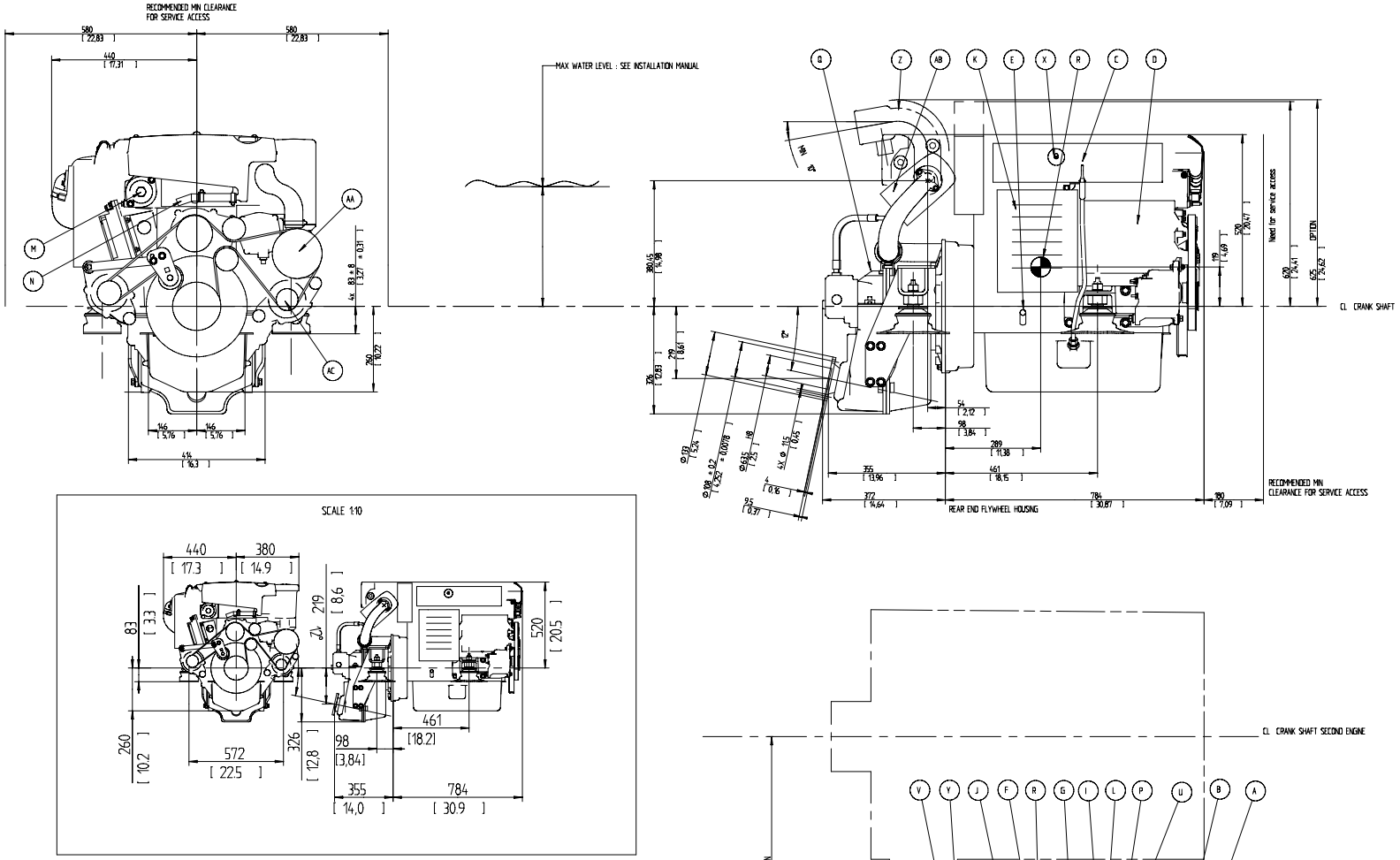

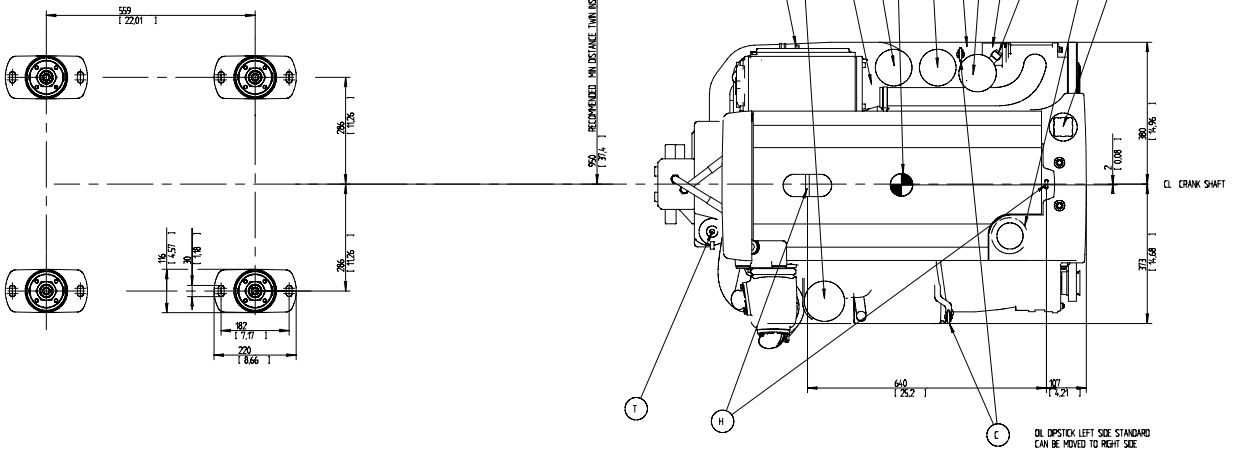

SCALE 15

The copyright, distribution and utilization of this document as well as the communication of its contents to others without express authorization is prohibited. Offenders will be held liable for the payment of damages. All rights reserved in the event of the grant of a patent, utility model or ornamental design registration.	SYMBOLS, DESIGNATIONS AND GENERAL DRAWING METHODS SIS 1914003 ISO, SIS 10209/2009	
	Product line ENGINE D4 / H5639V	
VOLVO PENTA	Document type DIMENSION DRAWING Owner Manufacturer plate	
	Document no. 3591860	Sheet no. 01 / Sheet No. 1/1