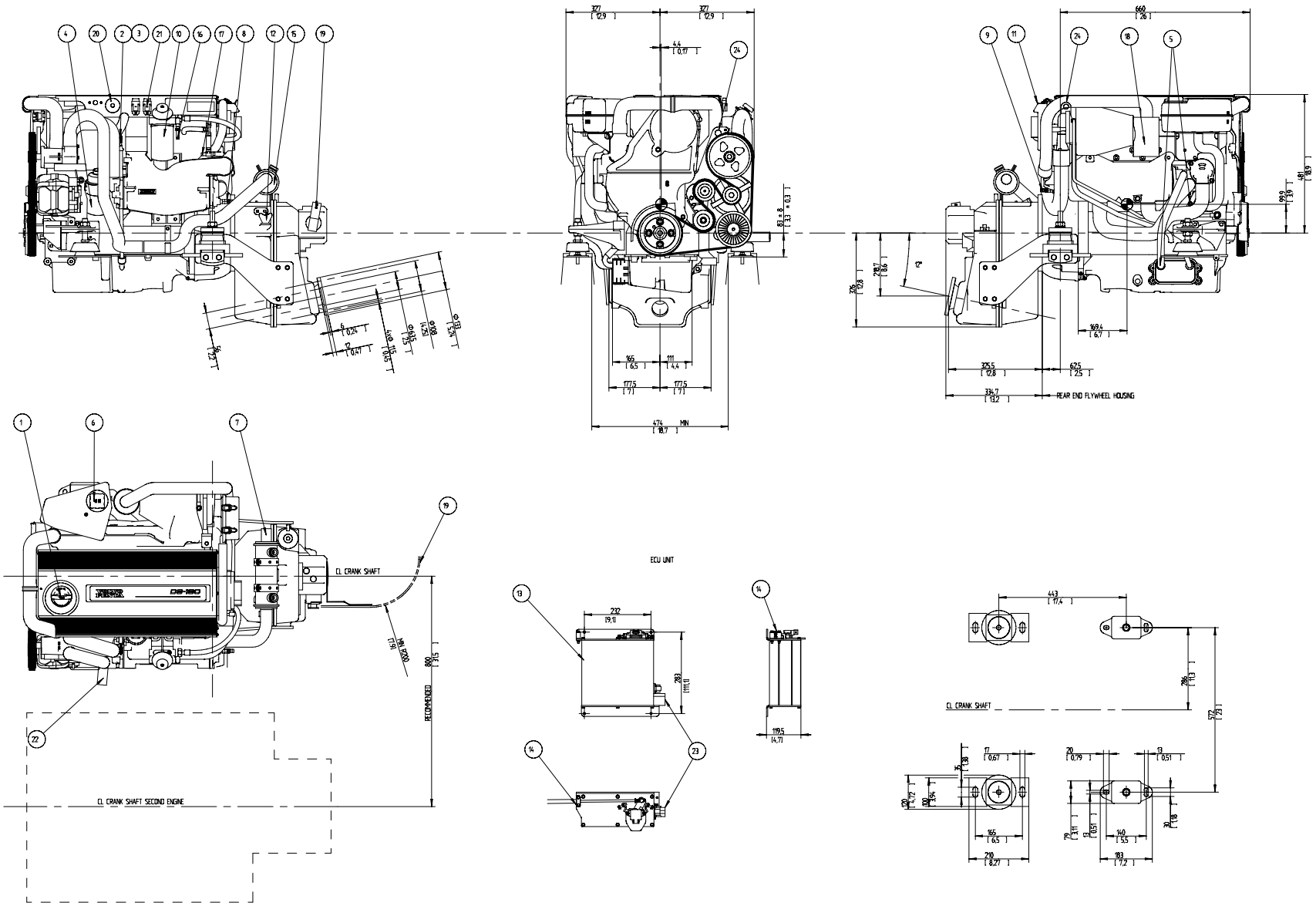

1. OIL FILLER CAP, ENGINE
2. OIL DIPSTICK, ENGINE
3. OIL DRAIN (WITH PUMP), ENGINE
4. OIL FILTER
5. WATER DRAIN, FRESH WATER
6. WATER FILLER CAP, FRESH WATER
7. WATER INLET, SEA WATER I.D. 32, (1.25)
8. WATER DRAIN CHARGE AIR COOLER, SEA WATER
9. WATER DRAIN HEAT EXCHANGER, SEA WATER
10. FUEL FILTER
11. AIR FILTER
12. OIL DIPSTICK REVERSE GEAR
13. ECU UNIT (BOAT MOUNTED)
14. THROTTLE CABLE ATTACHMENT
15. OIL COOLER, REVERSE GEAR
16. FUEL SUCTION CONNECTION FOR HOSE I.D. 9.5 (3/8)
17. FUEL RETURN CONNECTION FOR HOSE I.D. 9.5 (3/8)
18. EXHAUST ELBOW FOR HOSE I.D. 89, (3.5)
19. GEAR CONTROL CABLE ATTACHMENT
20. AUX. STOP
21. FUSE
22. ECU CABLE HARNESS OUTLET L=15M (5 FEET)
23. ECU CABLE HARNESS INLET
24. LIFTING DEVICE Ø21 (0.83)

CENTRE OF GRAVITY

RELEASED

SYMBOLS, DESIGNATIONS AND GENERAL DRAWING METHODS STD TP-1005 AND STD TP-1007

ENGINE INSTALLATION
D3 - 115G3V

INSTALLATION DRAWING

VOLVO PENTA

3591524 | 01 | 1(1)