A 40707	SEE EDB	P/K B 1 . 2 . 1988	RELEASED 03/07/01

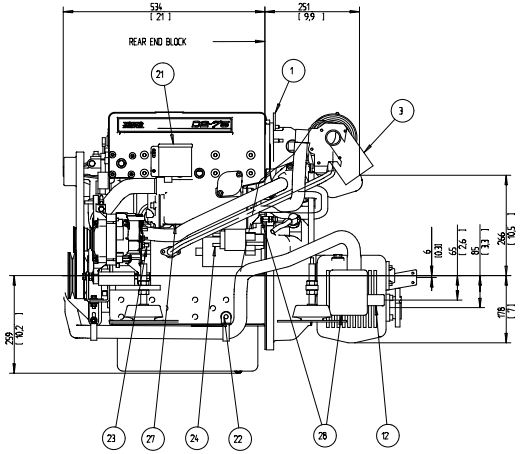

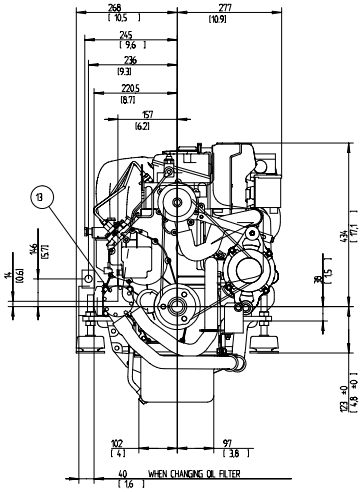

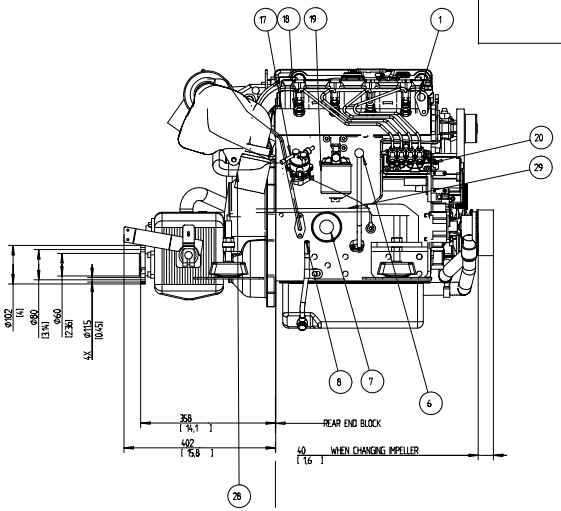

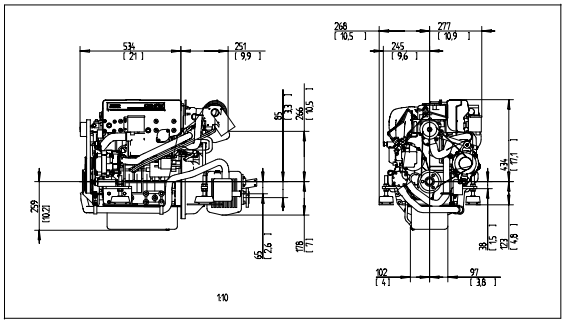

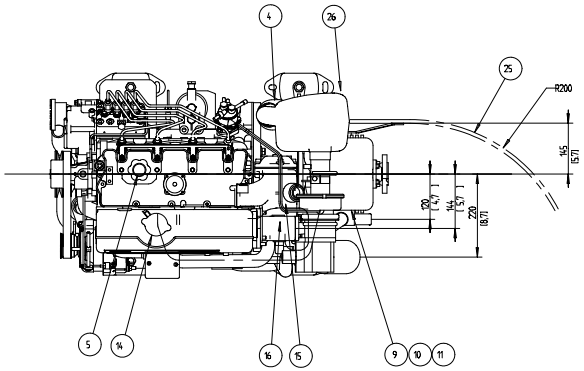

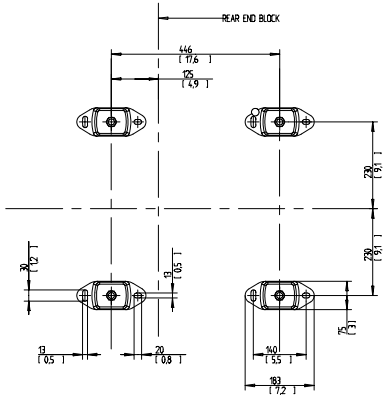

1 LIFTING DEVICE
3 EXHAUST ELBOW FOR HOSE ID 89
4 AIR FILTER
5 OIL FILLING
6 OIL DIPSTICK ENGINE
7 OIL FILTER
8 OIL DRAIN FOR PUMP, ENGINE
9 OIL DIPSTICK REVERSE GEAR
10 OIL FILLER CAP REVERSE GEAR
11 OIL DRAIN FOR PUMP, REVERSE GEAR
12 WATER INLET FOR HOSE ID 32
13 SEA WATER PUMP
14 WATER FILLER CAP FRESH WATER
15 HEAT WATER OUTLET
16 HEAT WATER INLET
17 FUEL CONNECTION FOR HOSE ID 9
18 FUEL RETURN CONNECTION FOR HOSE ID 9
19 FUEL FILTER
20 SPEED CONTROL LEVER
21 CONNECTION BOX FOR EXTENTION CABLE
22 BATTERY MINUS (-) CONNECTION
23 PLUS (+) CONNECTION FOR CHARGING DISTRIBUTOR
24 STARTER BATTERY PLUS (+) CONNECTION
25 GEAR SHIFT CONTROL CABLE
26 AIR INLET SILENCER
27 WATER DRAIN, FRESH WATER
28 WATER DRAIN, SEA WATER
29 THROTTLE CONTROL CABLE

SCALE 15

SYMBOLS, DESIGNATIONS AND GENERAL DRAWING METHODS STD 1027001

The copyright, distribution and utilization of this document as well as the communication of its contents to others without express authorization are prohibited. Offenders are liable to the payment of damages. All rights are reserved in the event of the grant of a patent, utility model or ornamental design registration.

VOLVO PENTA

Drawing title: ENGINE INSTALLATION D2-75 / MS25L

Drawing type: INSTALLATION DRAWING

Drawing no: 3591000 | Issue index: 02 | Sheet no: 1/1