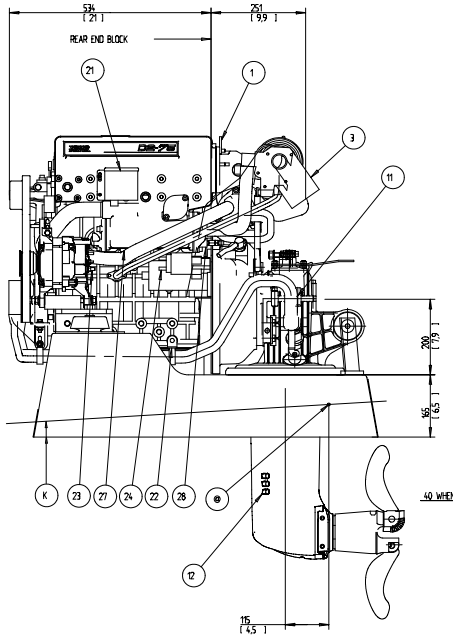

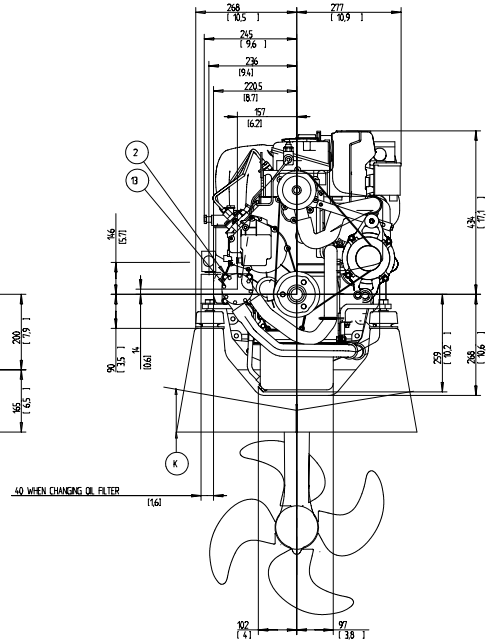

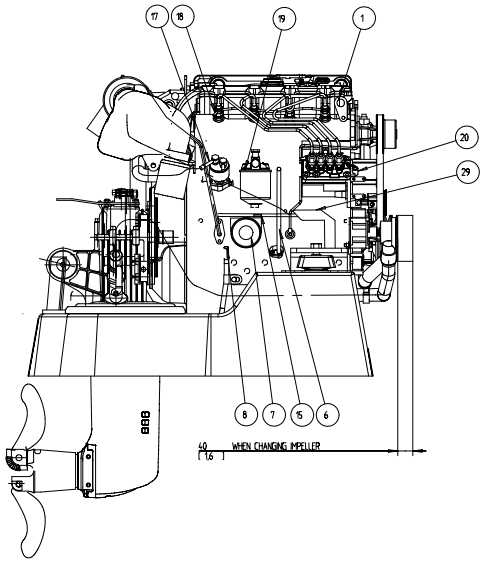

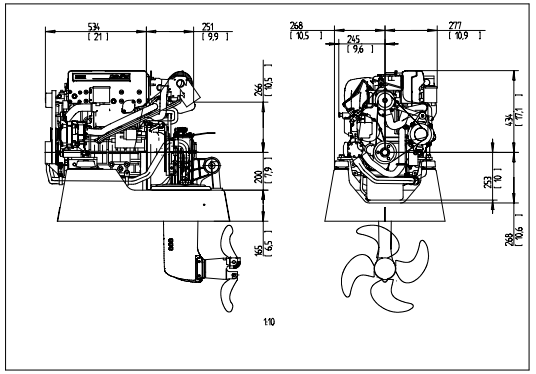

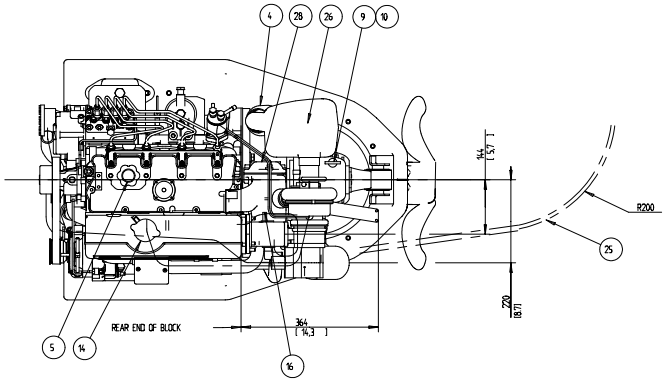

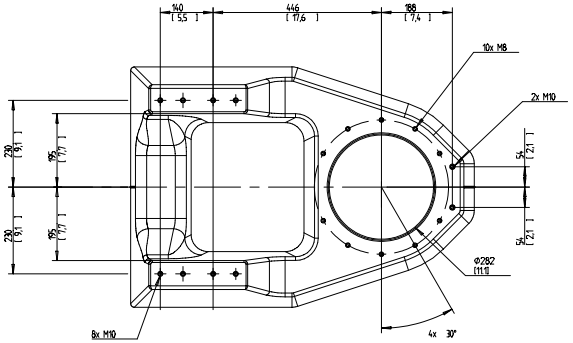

K LOWER EDGE TO BE CUT ACC. TO HULL FROM

⊕ REF. POINT SEE INST HANDBOOK PUBL No 77420/18

1 LIFTING DEVICE

2 WATER INLET, SEA WATER PUMP FOR HOSE ID 32

3 EXHAUST ELBOW FOR HOSE ID 89

4 AIR FILTER

5 OIL FILLING

6 OIL DIPSTICK ENGINE

7 OIL FILTER

8 OIL DRAIN FOR PUMP, ENGINE

9 OIL DIPSTICK S-DRIVE

10 OIL FILLER CAP S-DRIVE

11 WATER OUTLET, SEA COCK FOR HOSE ID 32

12 WATER INLET

13 SEA WATER PUMP

14 WATER FILLER CAP FRESH WATER

15 HEAT WATER OUTLET

16 HEAT WATER INLET

17 FUEL CONNECTION FOR HOSE ID 9

18 FUEL RETURN CONNECTION FOR HOSE ID 9

19 FUEL FILTER

20 SPEED CONTROL LEVER

21 CONNECTION BOX FOR EXTENTION CABLE

22 BATTERY MINUS (-) CONNECTION

23 PLUS (+) CONNECTION FOR CHARGING DISTRIBUTOR

24 STARTER BATTERY PLUS (+) CONNECTION

25 GEAR SHIFT CONTROL CABLE

26 AIR INLET SILENCER

27 WATER DRAIN, FRESH WATER

28 WATER DRAIN, SEA WATER

29 THROTTLE CONTROL CABLE

SCALE 1:5

A 40707	SEE EDB
P/K	RELEASED
03/07/01	

SYMBOLS, DESIGNATIONS AND GENERAL DRAWING METHODS STD 1007007

The copyright, distribution and utilization of this document as well as the communication of its contents to others without express authorization is prohibited. Offenders will be held liable for the payment of damages. All rights created by patent grant or registration of a utility model or ornamental design registration.

VOLVO PENTA

Description: ENGINE INSTALLATION D2-75 / 150S

Document type: INSTALLATION DRAWING

Raw dimensions/ prefix

Document No: 3591001

Issue index: 02

Sheet No: 1/1