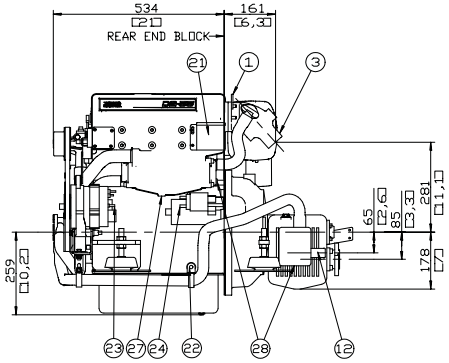

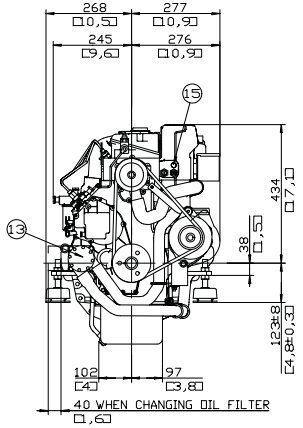

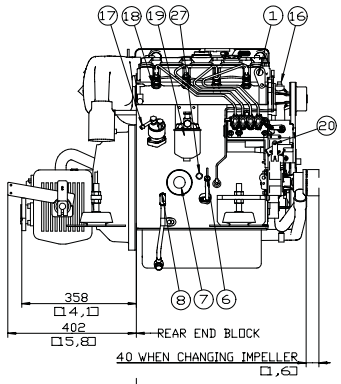

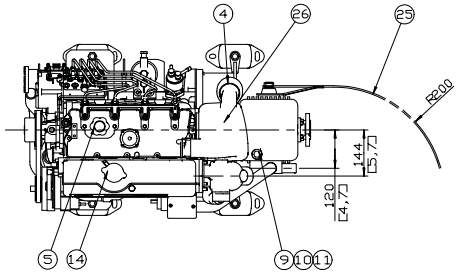

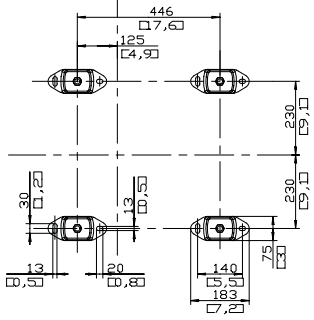

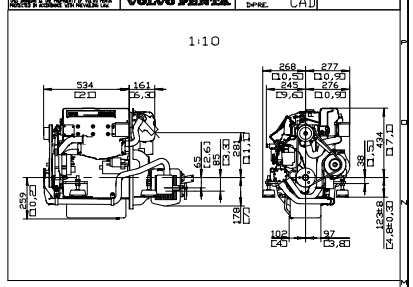

1. LIFTING DEVICE
3. EXHAUST ELBOW FOR HOSE I.D 57
4. AIR FILTER
5. OIL FILLING
6. OIL DIPSTICK ENGINE
7. OIL FILTER
8. OIL DRAIN FOR PUMP, ENGINE
9. OIL DIPSTICK REVERSE GEAR
10. OIL FILLER CAP REVERSE GEAR
11. OIL DRAIN FOR PUMP, REVERSE GEAR
12. WATER INLET FOR HOSE I.D 32
13. SEA WATER PUMP
14. WATER FILLER CAP FRESH WATER
15. HEAT WATER OUTLET
16. HEAT WATER INLET
17. FUEL CONNECTION FOR HOSE I.D 9
18. FUEL RETURN CONNECTION FOR HOSE I.D 9
19. FUEL FILTER
20. SPEED CONTROL LEVER
21. CONNECTION BOX FOR EXTENTION CABLE
22. BATTERY MINUS (-) CONNECTION
23. PLUS (+) CONNECTION FOR CHARGING DISTRIBUTOR
24. STARTER BATTERY PLUS (+) CONNECTION
25. CONTROL CABLE
26. AIR INLET SILENCER
27. WATER DRAIN, FRESH WATER
28. WATER DRAIN, SEA WATER

AB VOLVO PENTA

INSTALLATION DRAWING

SCALE	1/5	TYPE	D2-55 / MS25L
DRAWN	RL/RE	DRAWING NO.	3590608
CHECKED		SHEET	01
APPROVED			