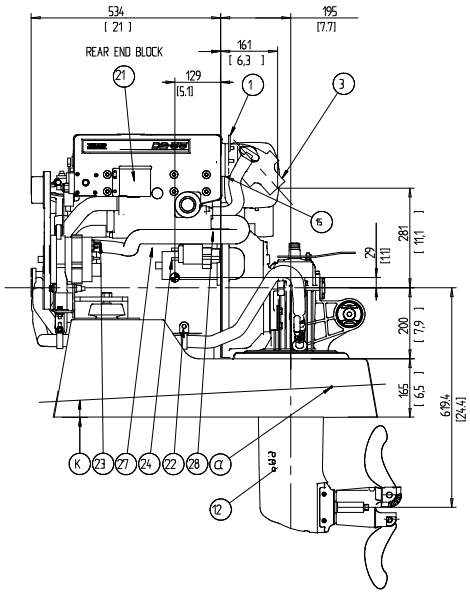

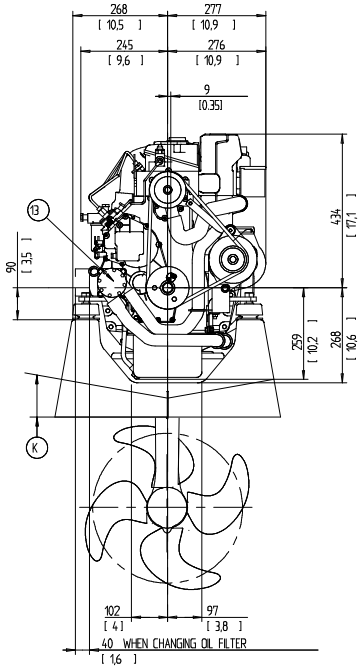

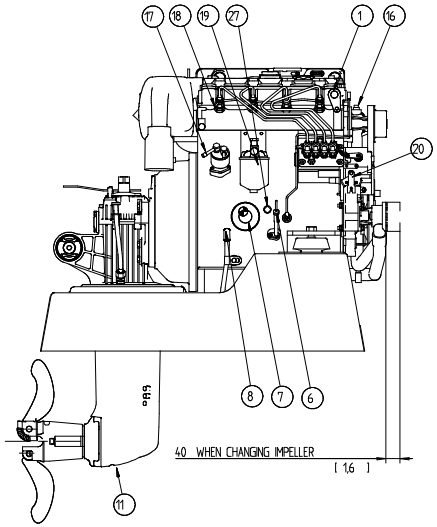

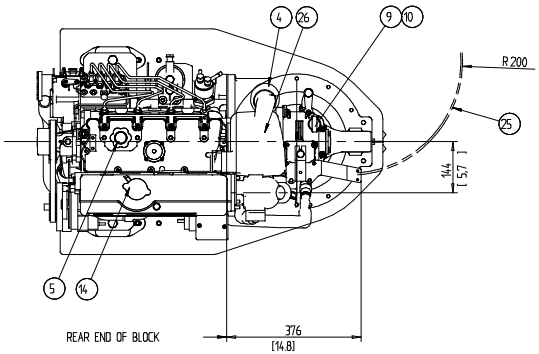

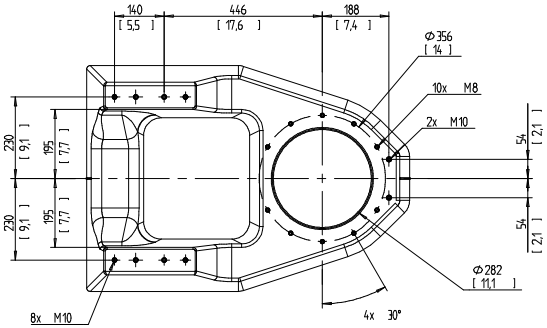

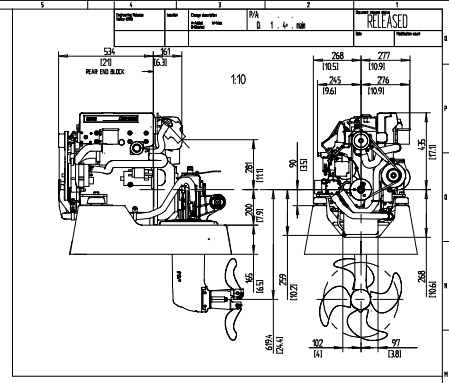

K	LOWER EDGE TO BE CUT ACC. TO HULL FO	RM
α	REF POINT. SEE INST HANDBOOK PUBL No	5292
1	LIFTING EYE	
3	EXHAUST ELBOW FOR HOSE I.D 57	
4	AIR FILTER	
5	OIL FILLING	
6	OIL DIPSTICK ENGINE	
7	OIL FILTER	
8	OIL DRAIN FOR PUMP, ENGINE	
9	OIL DIPSTICK S-DRIVE	
10	OIL FILLER CAP S-DRIVE	
11	OIL DRAIN S-DRIVE	
12	WATER INLET	
13	SEA WATER PUMP	
14	WATER FILLER CAP FRESH WATER	
15	HEAT WATER OUTLET	
16	HEAT WATER INLET	
17	FUEL CONNECTION FOR HOSE I.D 9	
18	FUEL RETURN CONNECTION FOR HOSE I.D	9
19	FUEL FILTER	
20	SPEED CONTROL LEVER	
21	CONNECTION BOX FOR EXTENTION CABLE	
22	BATTERY MINUS (-) CONNECTION	
23	PLUS (+) CONNECTION FOR CHARGING DIS	TRIBUTOR
24	STARTER BATTERY PLUS (+) CONNECTION	
25	CONTROL CABLE	
26	AIR INLET SILENCER	
27	WATER DRAIN, FRESH WATER	
28	WATER DRAIN, SEA WATER	

SCALE 1:5

RELEASED

VOLVO PENTA

ENGINE DIMENSIONS
D2-55 / 130S

DIMENSION DRAWING

3591365 | 01 | 1 (1)