Engineering Release Notice (ERN)	Location	Change description A=Added D=Deleted M=Mod	P/A . . D 1 . 4+ . main	Document release status RELEASED
				Date / Modification count

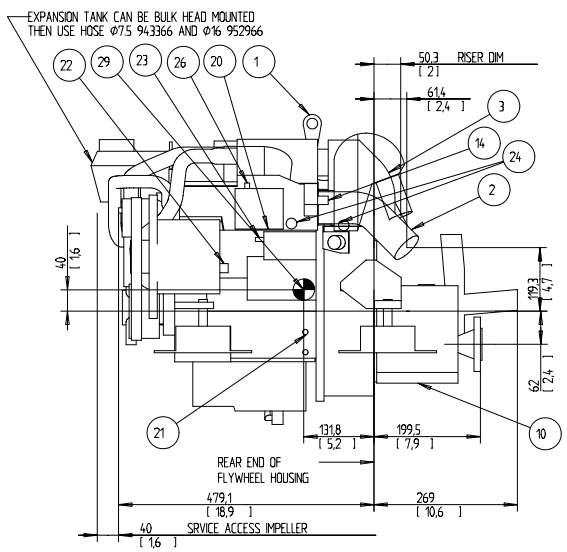

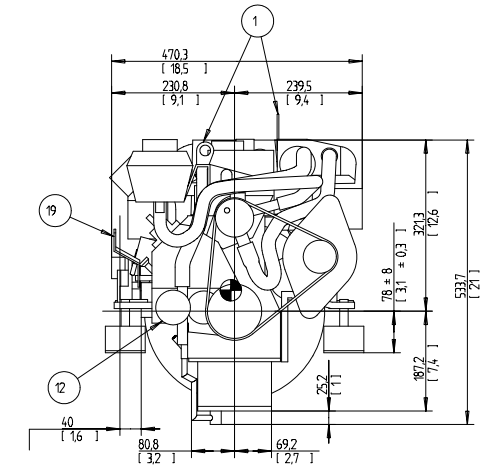

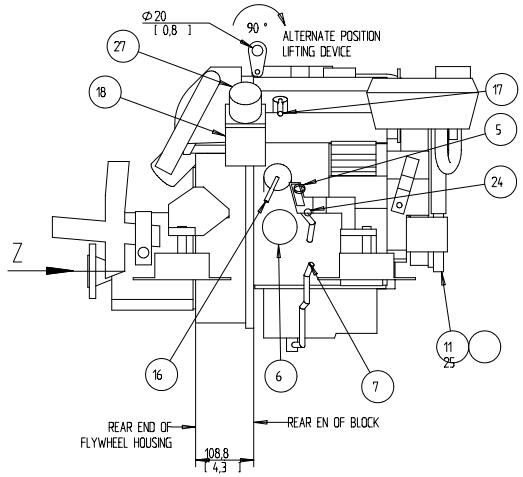

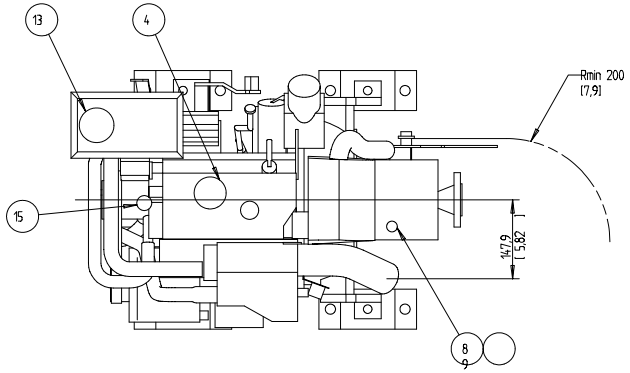

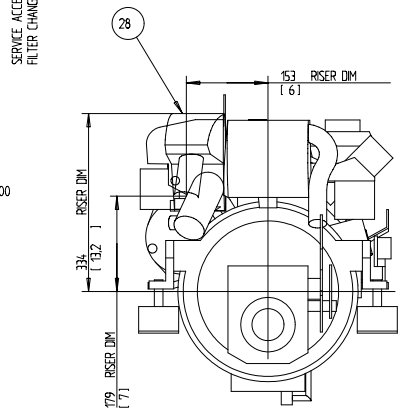

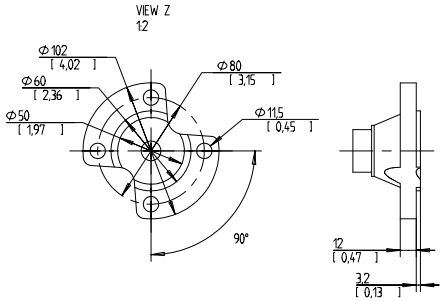

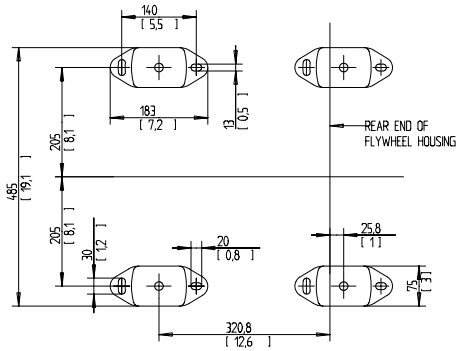

SCALE 1:5

OIL CAPACITY INCLUDING OIL FILTER: 2,8 LITERS

FRESHWATER SYSTEM CAPACITY: 3,0 LITERS

WEIGHTS:
DRY 127 kg
OIL & WATER 134 kg

DIMENSION IN MILLIMETRES AND [INCHES]

NR	ITEM
1	LIFTING DEVICE
2	EXHAUST ELBOW FOR HOSE ID 45[1,75]
3	AIR FILTER (SILENCER)
4	OIL FILLING
5	OIL DIPSTICK ENGINE
6	OIL FILTER
7	OIL DRAIN (WITH PUMP) ENGINE ID 8 [0,35]
8	OIL DIPSTICK REVERSE GEAR
9	OIL FILLER CAP REVERSE GEAR
10	OIL DRAIN REVERSE GEAR
11	SEAWATER INLET FOR HOSE ID 19[0,75]
12	SEA WATER PUMP
13	WATER FILLER CAP FRESH WATER
14	HOTWATER OUTLET
15	HOTWATER INLET
16	FUEL CONNECTION FOR HOSE ID 10 [3/8]
17	FUEL RETURN CONNECTION FOR HOSE ID 10 [3/8]
18	FUEL FILTER
19	SPEED CONTROL LEVER
20	CONNECTION BOX FOR EXTENSION CABLE
21	BATTERY MINUS (-) CONNECTION
22	PLUS (B+) CONNECTION FOR CHARGING DISTRIBUTOR
23	STARTER BATTERY PLUS (+) CONNECTION
24	WATER DRAIN FRESH WATER
25	WATER DRAIN SEAWATER
26	AUTOMATIC FUSE RESET
27	HAND PRIMER PUMP
28	RISER (OPTIONAL)
29	CENTRE OF GRAVITY

SYMBOLS, DESIGNATIONS AND GENERAL DRAWING METHODS STD 101-0005 AND STD 50231503

The copying, distribution and utilization of this document as well as the communication of its contents to others without expressed authorization is prohibited. Offenders will be held liable for payment of damages. All rights reserved in the event of the grant of a patent, utility model or ornamental design registration.

VOLVO PENTA

Document title: ENGINE DIMENSIONS D1-20/MS10L

Document type: DIMENSION DRAWING

Owner domain/Document prefix:

Document No: 3591387 | Issue index: 01 | Sheet No: 1(1) | Size: A1